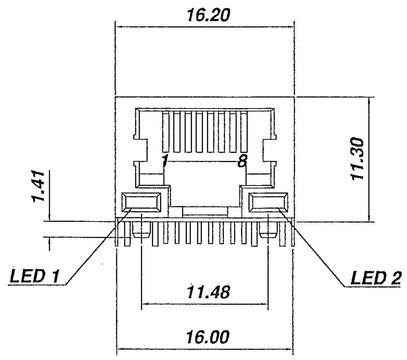

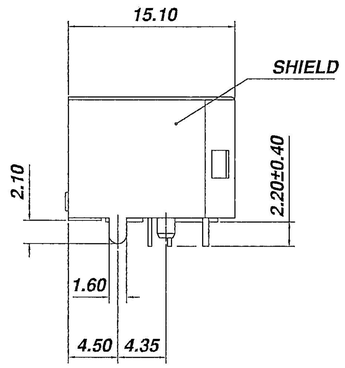

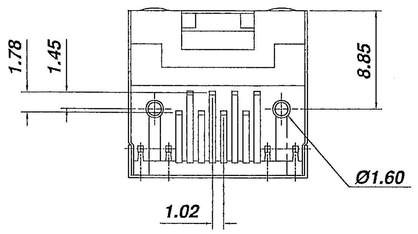

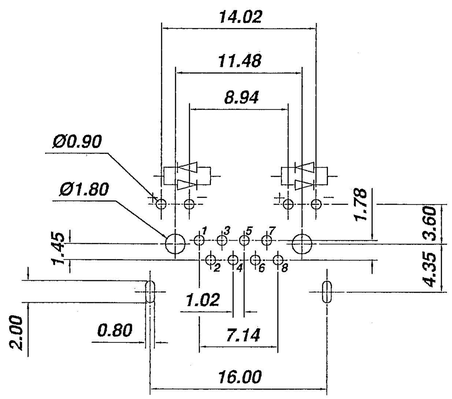

PCB LAYOUT
(Top View)

工程課
108. 05. 28
確認

SPECIFICATION :

1. Electrical Char.

Insulation Resistance : 500M-Ohm Min.
Contact Resistance : 20milli-Ohm Max.
Rating Current : 1.5A Max.
Rating Voltage : 120V AC.
Dielectric Voltage : 1,000 Vrms 60 Sec. Min.

2. Physical char.

Housing :
Nylon (UL 94V-0), Soldering Temperature:260°C
Color : Black Color
Spring Wire :
0.35mm Thickness Phosphor bronze Gold Plating Over Nickel
Shielded : Brass Plating Nickel
Temperature Range : - 40°C / +85°C
Durability : 500 Mating cycles Min.

CAJ-067SH-8-F-RX- A5-N1-XX

F=8p8c
Gold plated | 1=15u , 3=50u | 2=30u , 4= 6 u
LED 1 Designation
LED 2 Designation

LED Designation :

Code	Forward	Reverse	Code	Forward	Reverse
G	Green	——	4	Yellow	Red
Y	Yellow	——	5	Green	Yellow
R	Red	——	6	Yellow	Green
O	Orange	——	9	Red	Green
3	Green	Red	0	Red	Yellow

CHERNG WEEI TECHNOLOGY CORP.

TITLE
RJ45 SIDE ENTRY PCB JACK WITH LED

MODULAR JACKS ASSY FOR
CAJ-067SH-8-F-RX- A5-N1-XX

SCALE SIZE DWG. NO. 9767S SERIES

DWG. NO.	NOT SCALED DRAWING	TOLERANCE UNLESS OTHERWISE NOTICE			DR.	DATE
	THIRD ANGLE PROJECTION	LINEAR MM	00±0.25 000±0.13 0000±0.05		CK`D	
AJ-067SH-8-F-RX-A5-N1-XX	C313A(D)20091111mi	ANGLE+0`30'	RADIL	+0.45 -0.15	APP`D	