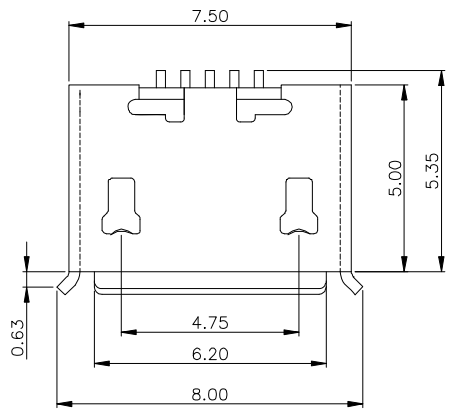

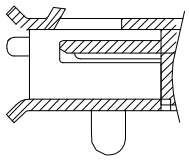

MATERIALS

HOUSING: HI-TEMP. PLASTIC(UL 94V-0)
SHELL: COPPER ALLOY, TIN PLATING
TERMINAL: COPPER ALLOY , GOLD PLATED

SPECIFICATION

CURRENT RATING: 1.8 AMP MAX (ONLY PIN 1, 5), OTHER 1 AMP MAX
DIELECTRIC WITHSTANDING: 100V AC FOR ONE MINUTE
CONTACT RESISTANCE: 30m OHMS MAX
INSULATION RESISTANCE: 100M OHMS MIN AT DC 500V
OPERATION TEMPERATURE: -25° C~+105° C

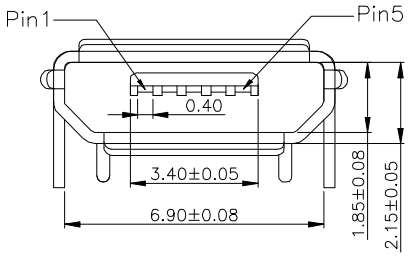

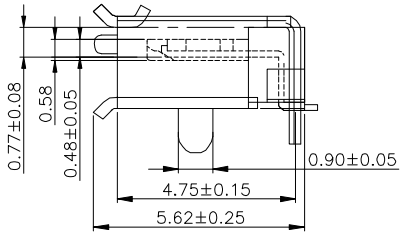

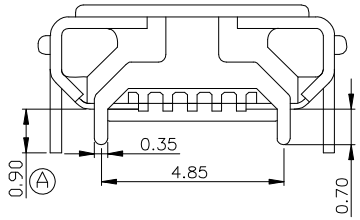

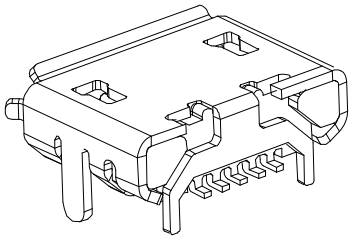

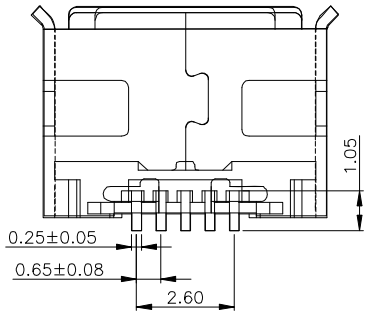

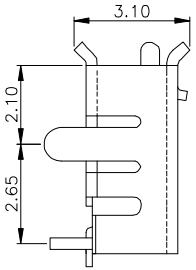

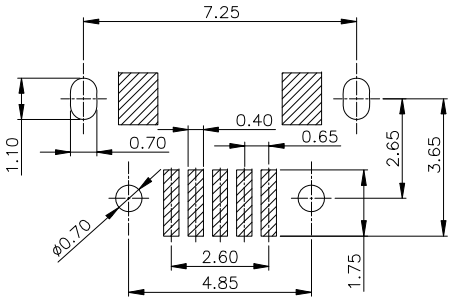

RECOMMENDED P.C.B LAYOUT

工程課
105.09.08
確認

承洧科技股份有限公司 Cherng Weei Technology Corp.	DESCRIPTION(內容): MICRO USB B TYPE, PCB MOUNT, SMT+DIP, METAL SHIELD, FEMALE (RoHS)	DRAWN(製圖): GONG	GENERAL TOLERANCE: (公差) .X ±0.3 .XX ±0.2	REV: R2	REV	DESCRIPTION	DATE
		CHECKED(確認): TERESA		UNIT: mm	R0	RELEASE	2013.09.12
	PART NO: (料號) UMMBF-051MGCB9-CF1066	APPROVAL(核准): JOHNNY	SCALE(比例): FREE	SIZE: A4	R1	2015圖面更新	2015.04.17
				SHEET: 1/1	R2	變更Ⓐ尺寸 & 圖號(原:22TBH-051-119L)	2016.09.08
	DWG NO(圖號): 22TBH-051-129L				R3		

CF1066